OWNERS AND SERVICE MANUAL

INNOVATIVE CONCEPTS IN ENTERTAINMENT INC.

10123 MAIN STREET, CLARENCE, NY 14031

SERVICE: 1-716-759-0360

FAX: 1-716-759-0884

E-MAIL: service@icegame.com

WEBSITE: www.icegame.com

TABLE OF CONTENTS

Safety and Warnings	4
Setup	
Game Play	5
Game Setup	
Volume Controls	
Programming	See Insert
Service	7
Computer Access	
I/O Access	8
Audio Amplifier and Power Supply Access	9
Monitor Removal and A/D Board Access	
Assembly Diagrams	
Main cabinet components	10-27
Wiring Diagrams	See insert
Spare Parts	28
Warranty	29

SAFETY AND WARNINGS

BEFORE YOU BEGIN

WARNING: WHEN INSTALLING THIS GAME, A GROUNDED A.C. RECEPTACLE MUST BE USED. FAILURE TO DO SO COULD RESULT IN INJURY TO YOURSELF OR OTHERS. FAILURE TO USE A GROUNDED RECEPTACLE COULD ALSO CAUSE IMPROPER GAME OPERATION, OR DAMAGE TO THE ELECTRONICS. DO NOT DEFEAT OR REMOVE THE GROUNDING PRONG ON THE POWER CORD FOR THE SAME REASON AS GIVEN ABOVE. USING AN IMPROPERLY GROUNDED GAME COULD VOID YOUR WARRANTY. HAVE A QUALIFIED ELECTRICIAN CHECK YOUR A.C. RECEPTACLE TO BE SURE THE GROUND IS FUNCTIONING PROPERLY. DO NOT WASH YOUR GAME WITH A PRESSURE WASHER.

AVERTISSEMENT: lors de l'installation de ce jeu, la terre AC récipient doit être utilisé. Ne pas le faire pourrait entraîner un préjudice à vous ou à d'autres. Le non-recours à la terre récipient pourrait également causer une mauvaise opération de jeu, ou les dommages causés à l'électronique. NE PAS détériorer ou de retirer la broche de terre sur le cordon d'alimentation pour la même raison, comme indiqué ci-dessus. Indûment l'aide d'un jeu de la terre pourrait annuler votre garantie. Ont un électricien qualifié de vérifier votre récipient AC pour s'assurer que le sol fonctionne correctement. Ne lavez pas votre jeu avec une laveuse à pression.

INSTALLATION

The game comes ready to play with just a few simple things to keep in mind.

1. Plug the game into the A.C. outlet and turn on power to the game. The switch for the game is located on a power module on the outside rear of the game.

THIS GAME IS DESIGNED TO DISSIPATE STATIC ELECTRICITY THROUGH THE GROUNDING PLANE OF THE GAME. IF THE A.C. GROUND DOES NOT WORK, THE GAME COULD DISCHARGE STATIC ELECTRICITY THROUGH THE GAME CIRCUITRY, WHICH COULD CAUSE DAMAGE.

2. Make sure the game is level after installation. It is necessary to make sure the game is level for safety concerns.

3. Check that the A.C. voltage rating on the back of the game matches the A.C. voltage of your location.

THE POWER SUPPLY IS NOT VOLTAGE ADJUSTABLE. TO OPERATE THE GAME AT VOLTAGES OTHER THAN THOSE IT WAS DESIGNED FOR. PLEASE CONTACT OUR SERVICE DEPARTMENT FOR VOLTAGE CONVERSION INFORMATION.

WARNING

DO NOT remove any of the components on the main board (e.g. compact flash and eproms) while the game is powered on. This may cause permanent damage to the parts and the main board. Removing any main board component part while powered on will void the warranty.

Ne retirez pas l'un des composants sur la carte principale (par exemple Compact Flash et EPROMs), tandis que le jeu est sous tension. Cette mai causer des dommages permanents aux parties et la carte principale. Suppression de tout bord principal élément sous tension alors que annulera la garantie.

NOTE: THIS GAME IS INTENDED FOR INDOOR USE ONLY.
ON THE BACK PANEL OF THE GAME: WARNING: SHOCK HAZARD - DO NOT OPEN. REFER SERVICING TO SERVICE PERSONNEL.

REMARQUE: CE JEU EST DESTINÉ POUR USAGE À L'INTÉRIEUR SEULEMENT.
SUR LE PANNEAU ARRIÈRE DU JEU: AVERTISSEMENT: RISQUE DE CHOC - NE PAS OUVRIR. RÉPARATION À UN PERSONNEL DE SERVICE.

SETUP - INTRODUCTION

Game Play:

You begin by trying to hit moving targets and score as many points as possible. Don't forget to hit the chest of gold as it whisks across the screen! The round ends and all points scored is translated to tickets. Now you have the choice to collect these tickets or go for the Super Bonus Round and possibly win hundreds of tickets! But winning is easier said than done as in the final round you will need to hit a apple from a far.

Setup:

Your game is shipped with the marquee disconnected. Mounting bolts are located in the cash box. There are five mounting bolts that hold the marquee to the cabinet. You must plug the electrical connection together before attach the marquee to the cabinet.

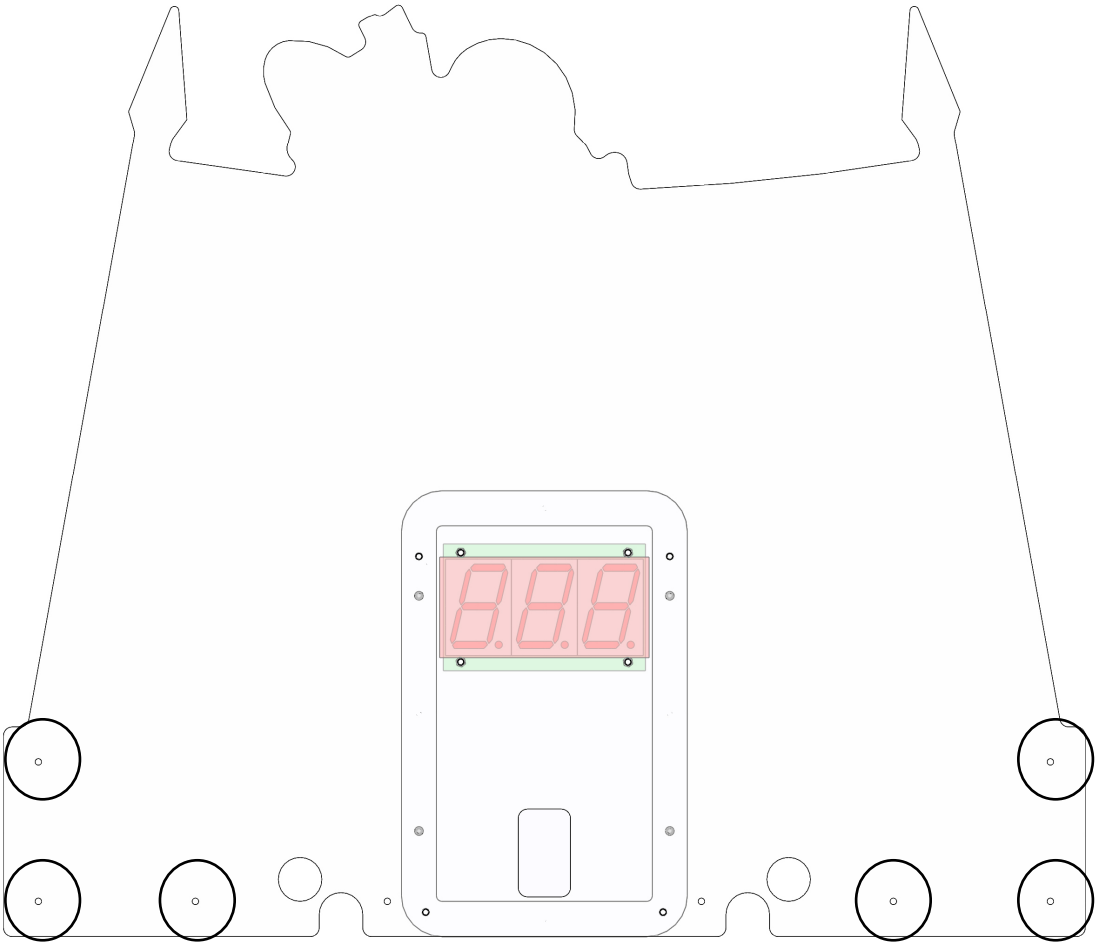

SETUP - ASSEMBLY

METERS LOCATION

The meters are located through the coin door. Both coin and ticket meters can be found there.

CHANGING THE VOLUME LEVELS DURING PLAY

There are UP and DOWN buttons located in the coin door. Pressing of these buttons will either increase the volume level or decrease the level volume. You can also adjust the volume in programming.

ADDING A TEST CREDIT WITHOUT ADVANCING THE COIN METER

Pressing the “SERVICE” button located in the coin door will add one credit to the game without advancing the coin meter.

ACCESSING PROGRAMMING

Press the button “DIAG” located in the coin door to enter programming.

PROGRAMMING

To navigate through the menus, press the “UP” and “DOWN” buttons to move up and down in the menus or to increase or decrease the values of each option. Press the “DIAG” button to select the desired menu or the option to change.

PROGRAM OPTIONS

See insert for latest program options.

SERVICE

CAUTION

This game uses complex electronic components that are very sensitive to static electricity. Observe precautions below before handling these electronics. Failure to do so may void the warranty and damage electronic assemblies.

Before servicing electronics, turn off AC power to the game. Wait for capacitors to discharge.

DO NOT remove any of the components on the main board (e.g. compact flash and eproms) while the game is powered on. This may cause permanent damage to the parts and the main board.

Before touching or handling electronic assemblies, discharge static electricity on your body. To discharge this static, begin by connecting the line cord to a grounded outlet. Don't turn on the game. Next, touch the safety ground stud of the power supply chassis.

Store electronic assemblies in an anti-static area. Use anti-static bags to store or transport the game circuit boards.

Don't remove or connect electronic assemblies when cabinet power is on. Otherwise, you'll damage electronic assemblies and void the game's warranty.

After you complete maintenance or service, replace ground wires, shields, safety covers and install and tighten ground and mounting screw.

ACCESS COMPUTER

The computer is accessed through the right side of the cabinet thru a access door. The computer is held down by two straps. Pressing the inner buttons release the straps. Disconnect all wiring harnesses before removing computer.

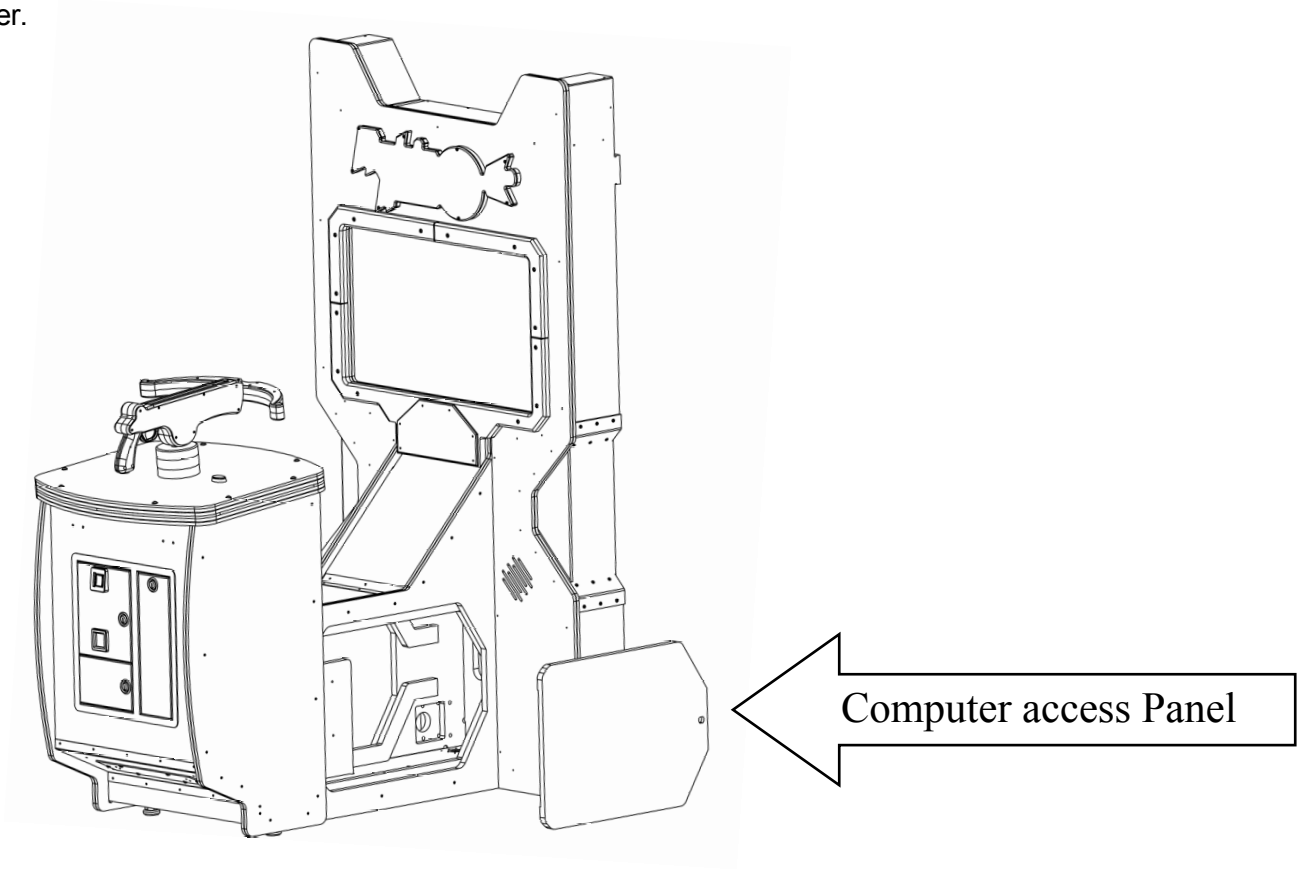

SERVICE

ACCESS THE I/O BOARD

The I/O board is accessed through the left side of the cabinet thru a access door. Four 1/4 plastic standoffs hold the board to its mounting screws.

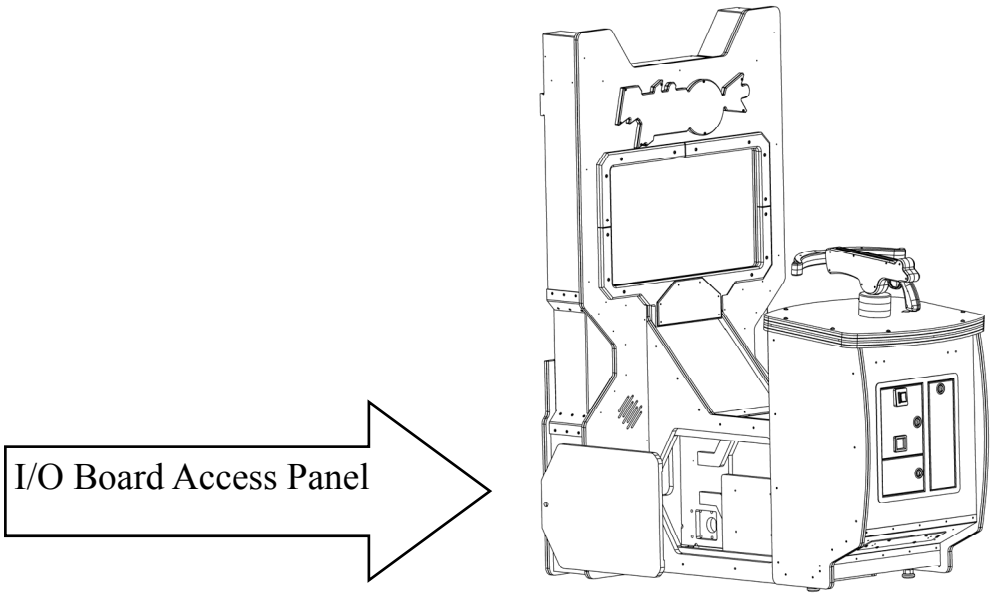

ACCESS TO THE POWER SUPPLY AND AUDIO AMPLIFIER

The power supply for the I/O board, lamps, amplifier, and controls is mounted to the back of the game. The audio amplifier is also found there.

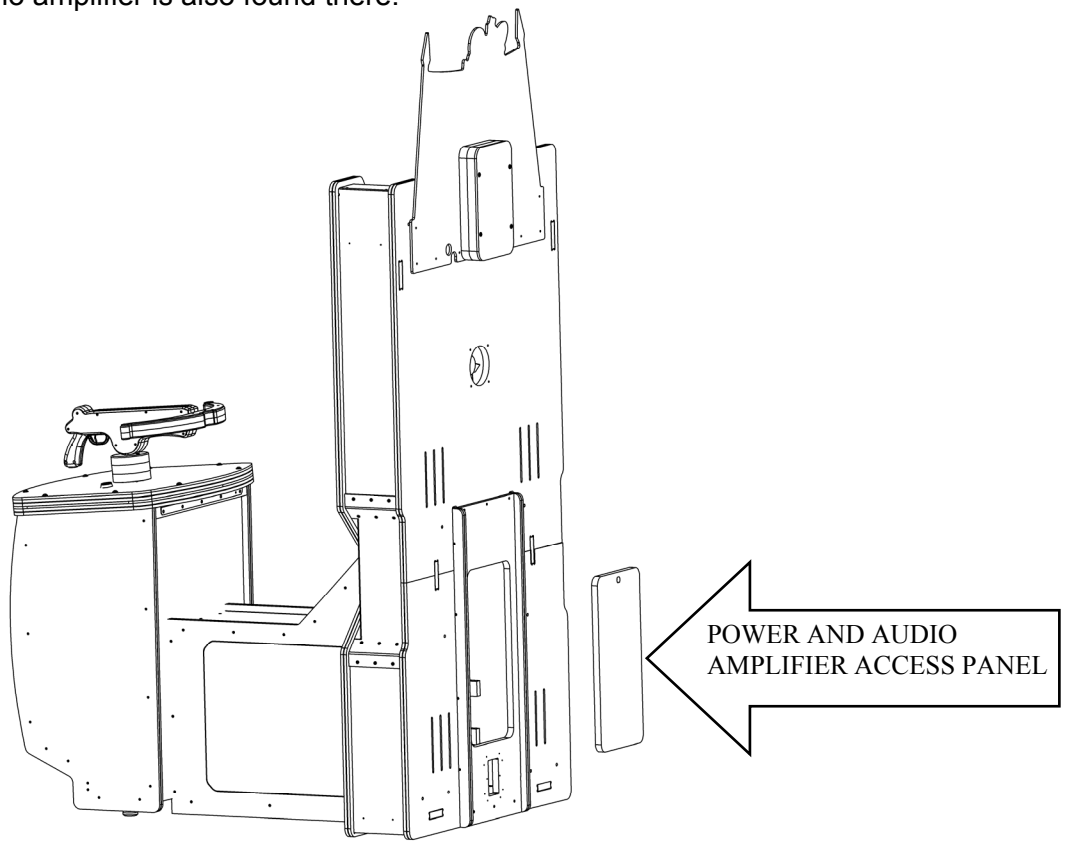

SERVICE

MONITOR REMOVAL AND A/D BOARD ACCESS

To gain access to the monitor and the monitor A/D board, remove the marquee. To remove the marquee, remove the 6 1/4-20 bolts that hold the marquee to the cabinet. Be sure to unplug the harness to the bonus display. Now remove the large back panel. To remove the back panel, remove the 4 1/4-20 bolts, two at the top and two at the bottom, that hold it to the cabinet. Be sure to disconnect the wiring for the A/C fan. The monitor is attached with self tappers. The A/D board is located under the metal shield attached to the LCD panel. Remove this panel by removing the four Phillips screws. On some models, you will need to also remove the shield mounting screws using a 3/16 nut driver. Be careful when removing the connectors for the A/D board as they are very fragile.

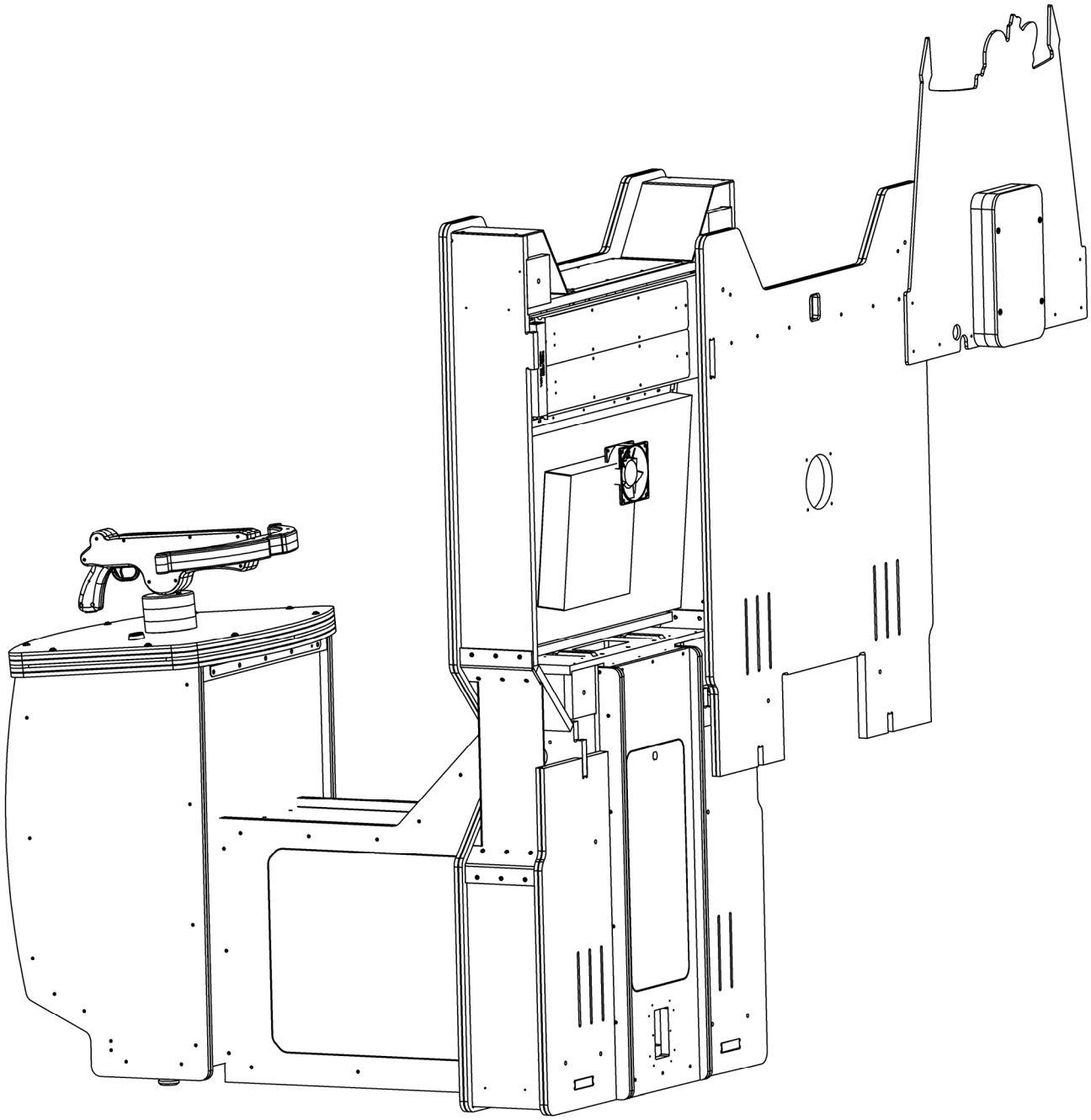

ASSEMBLY DRAWINGS - RH3025

ITEM NO.	PART NUMBER	DESCRIPTION	QTY.
1	RH1015	VAC FORM BRACKET	8
2	PEM S-0420-1 ZI--N	1/4-20 PEM NUT (CS)	8
3	RH3025	MONITOR VAC FORM	1
4	6250	BHCS #8-32 x 75" LG. (BLACK)	16
5	6240	#8 USS WASHER (BLACK)	36
6	6072	8-32 NYLOCK NUT	22
7	RH2027	MCMASTER CARR 6 - 8507K54	1
8	RH3046	TOWER LIGHT COVER LARGE	4
9	RH3047	CENTER LIGHT COVER	1
10	RH3048	TOWER LIGHT COVER SMALL	2
11	RH3093	MARQUEE	1
12	RH3094	MARQUEE SPACER	2
13	RH3095	CENTER LIGHT GEM	1
14	6004a	8-32 KEP NUT	28
15	6031	#8 FLAT WASHER (ZINC)	10
16	656	FH-632-12 (ZINC)	12
17	6031	#8 FLAT WASHER (ZINC)	16
18	PreviewCfg	FH-632-20	2
19	6626	#8-32 x 3" LG PPHMS	12
20	RH3039	VAC FORM BACK PANEL	1
21	RH3038	MONITOR FRAME LEFT	1
22	RH3040	MONITOR FRAME RIGHT	1
23	RH3041	MONITOR FRAME BOTTOM	1
24	RH3042	MONITOR FRAME TOP	1
25	RH3037	MONITOR BOTTOM	1
26	PC60631	025-20 CABINET INSERT (J50115)	8
27	6061	8-32 CAB INSERT (J-50111)	16
28	MON32LCD	TFT MONITOR	1
29	RH1012	GLASS BRACKET	2
30	RH3027	MONITOR GLASS	1
31	8284	BALLAST (WH6-120-L)	1
32	RH1016	SPEAKER BRACKET	2
33	FP2007	SPEAKER (4" ROUND) KS40064-RO	2
34	PreviewCfg	8-32 x 3/8 PHMS	8
35	RH3045	REAR DOOR PANEL	1
36	BW250	BULB SOCKET 2G11 SIDE MOUNT #1327	3
37	8312 BULB	BULB PL-L 40W-41-RS-IS FLOUR.	3
38	BW2018	BULB PLASTIC SUPPORT (1320-13)	3
39	BW2017	BULB PLASTIC CLIP (1320-10)	3
40	ML2032X	PCBA (DISPLAY, RED LED DIGITS)	1
41	RH3003	BONUS MARQUEE DISPLAY FILTER	1
42	644	6-32 x 1/2 HH SPACER 14HTSP008	12
43	RH3053	BONUS MARQUEE SPACER	1
44	RH3097	BONUS MARQUEE COVER	1
45	6419	6-32 x 1.25 PEM STUD (FH-632-20ZI)	8
46	RH3061	BONUS MARQUEE BACK	1
47	6166	#6 DRYWALL SCREW 1-1/2" SQ-PH TOOTHED HEAD	4
48	6272	BHCS #8-32 x 1.25" LG. (BLACK OXIDE)	12
49	RH7027	RH BONUS MARQUEE	1
50	6212	1/4 x 3/4 FLAT WASHER BLACK (USS)	4
51	PC60622	1/4-20 x 1.00" LG. BSHCS	4

ASSEMBLY DRAWINGS - RH3025

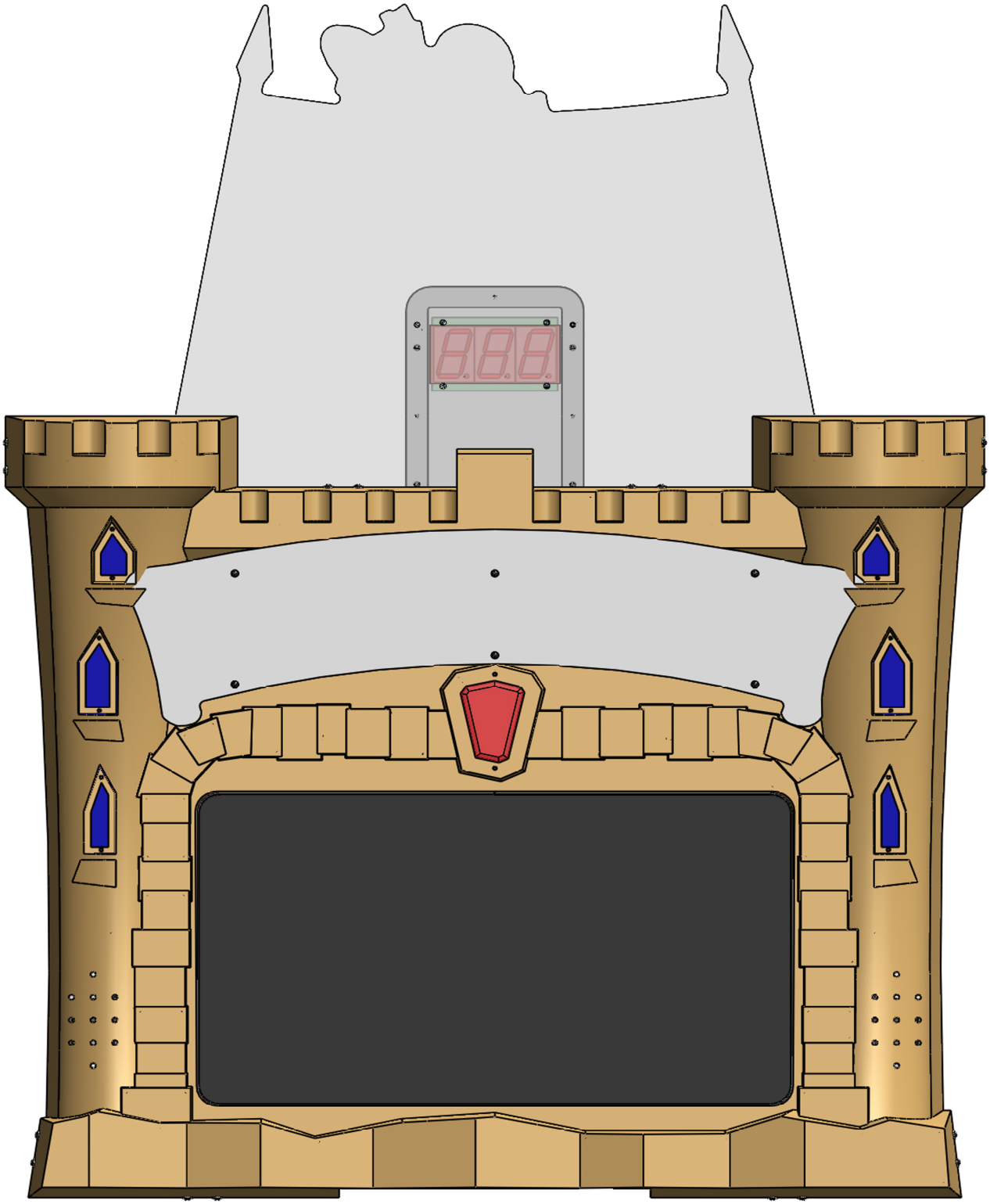

ASSEMBLY DRAWINGS - RH3025

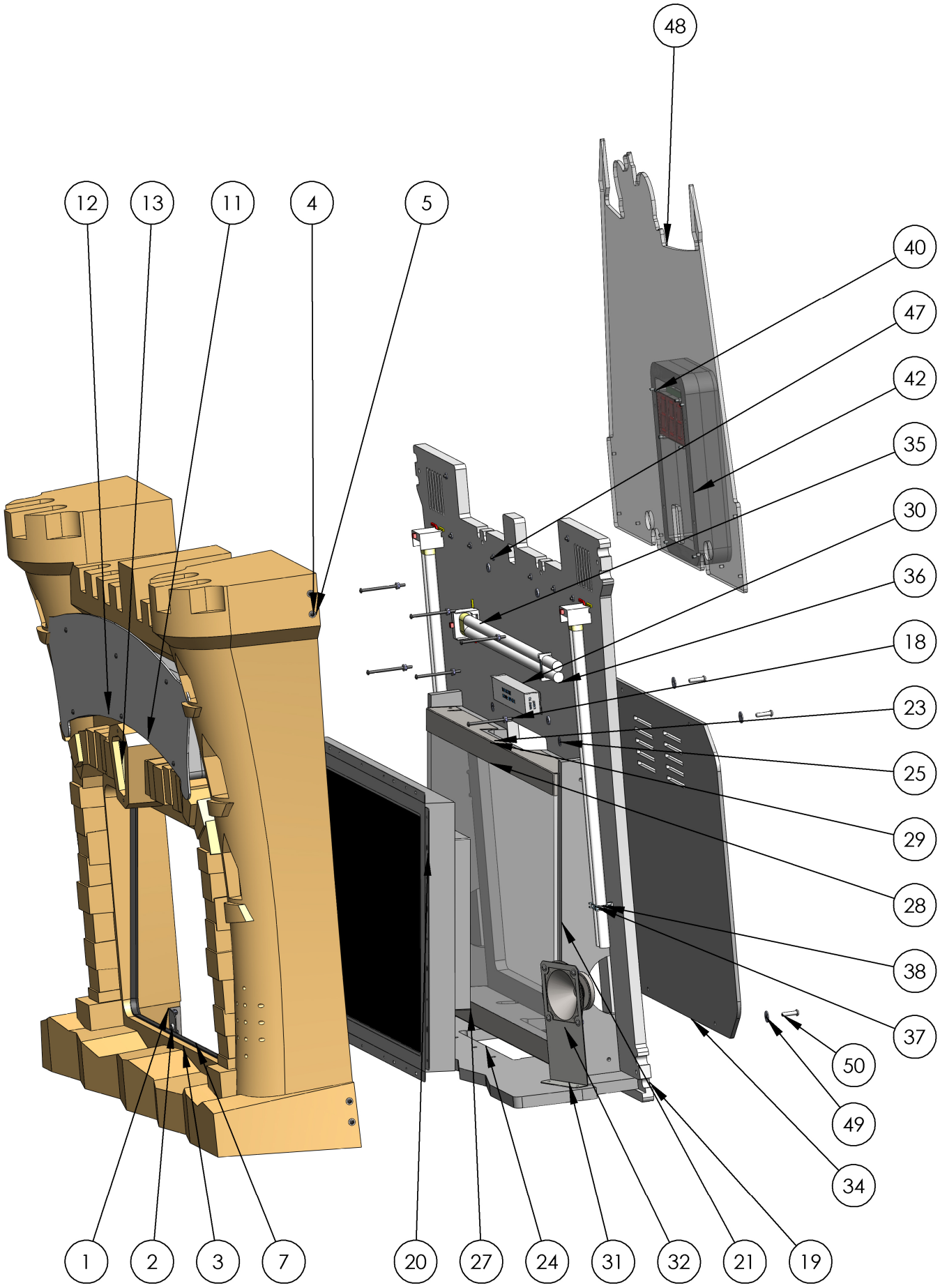

ASSEMBLY DRAWINGS - RH3025

ITEM NO.	PART NUMBER	DESCRIPTION	QTY.
1	RH1015	VAC FORM BRACKET	8
2	PEM S-0420-1 ZI--N	1/4-20 PEM NUT (CS)	8
3	RH3025	MONITOR VAC FORM	1
4	6250	BHCS #8-32 x 75" LG. (BLACK)	16
5	6240	#8 USS WASHER (BLACK)	16
6	6072	8-32 NYLOCK NUT	22
7	RH2027	MCMASTER CARR 6 - 8507K54	1
8	RH3046	TOWER LIGHT COVER LARGE	4
9	RH3047	CENTER LIGHT COVER	1
10	RH3048	TOWER LIGHT COVER SMALL	2
11	RH3093	MARQUEE	1
12	RH3094	MARQUEE SPACER	2
13	RH3095	CENTER LIGHT GEM	1
14	6004a	8-32 KEP NUT	14
15	6031	#8 FLAT WASHER (ZINC)	10
16	656	FH-632-12 (ZINC)	12
17	6031	#8 FLAT WASHER (ZINC)	10
18	PreviewCfg	FH-632-20	2
19	6626	#8-32 x 3" LG PPHMS	6

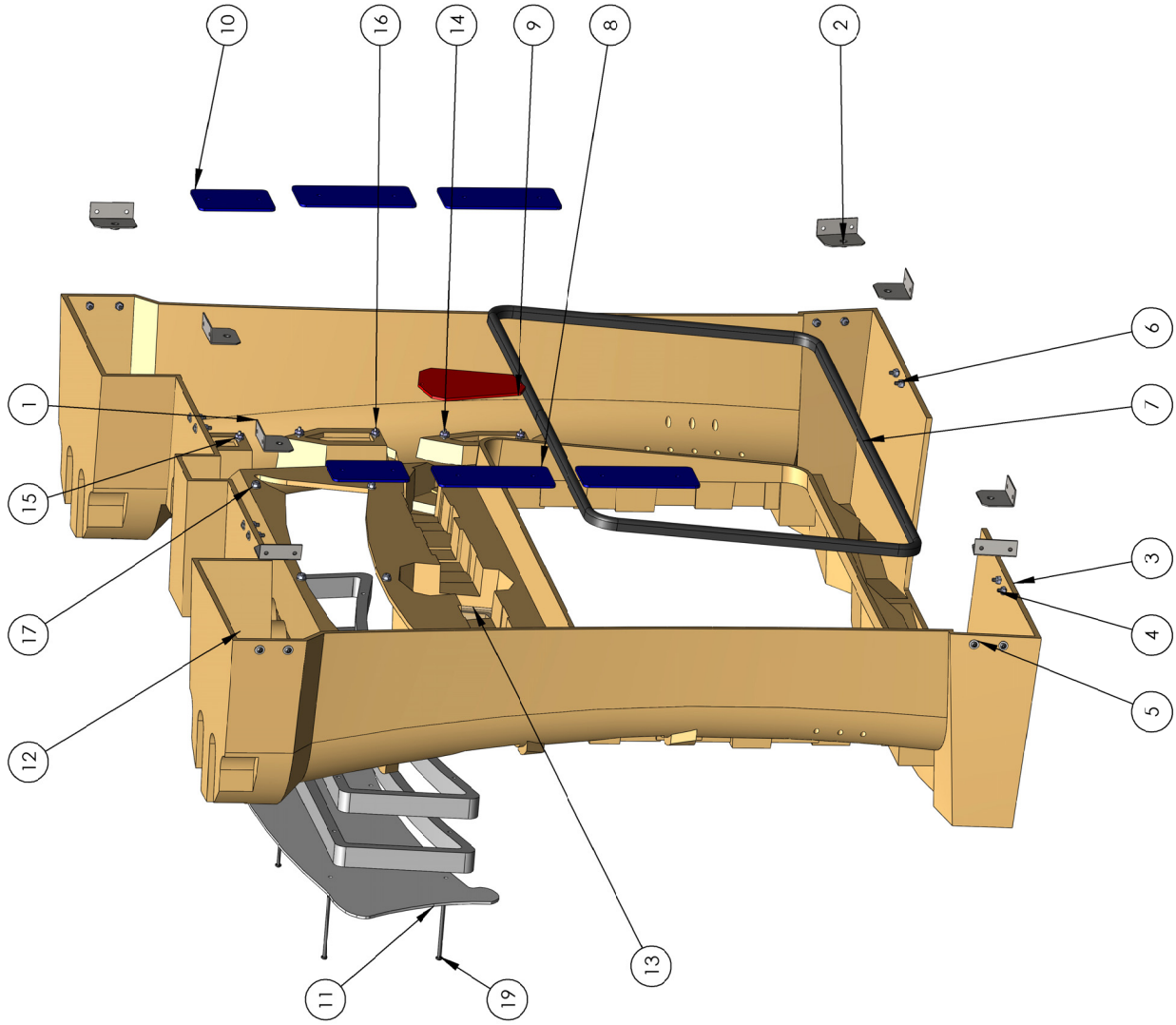

ASSEMBLY DRAWINGS - RH3060X

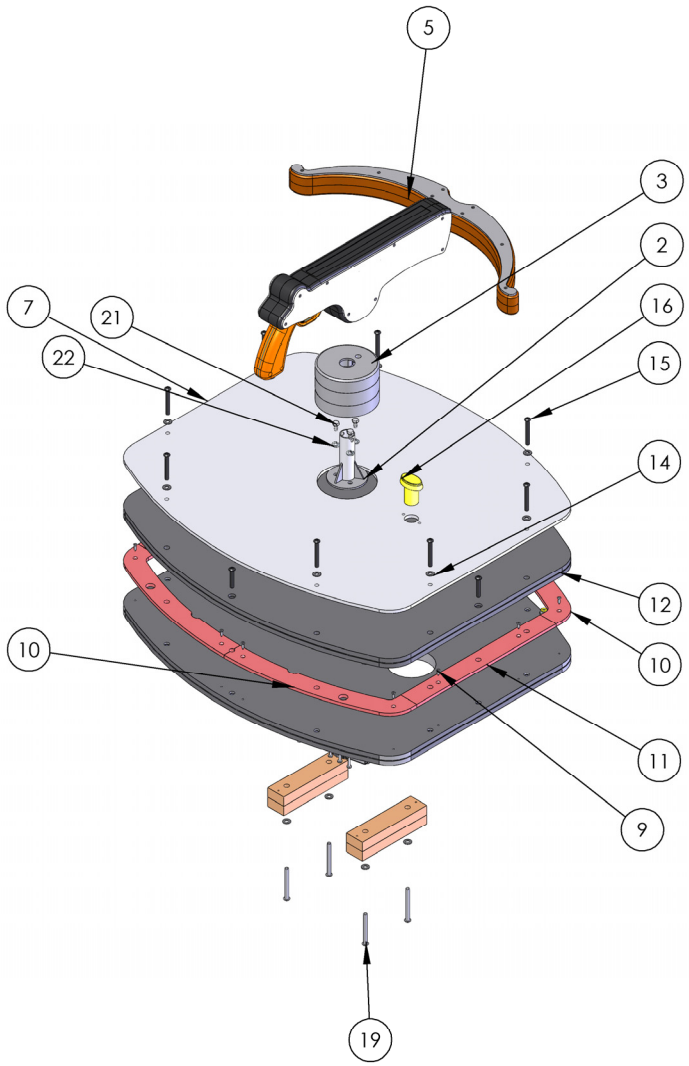

ITEM NO.	PART NUMBER	DESCRIPTION	QTY.
1	RH1020	CONTROL PANEL LATCH PLATE	2
2	RH1021	CROSSBOW SUPPORT TUBE ASSY	1
3	RH3006X		1
4	RH3031CX	PODIUM TOP TIER 1 ASSY	1
5	RH3010X	CROSSBOW ASSEMBLY	1
6	RH1025	PODIUM TOP HINGE	1
7	RH7012	PODIUM TOP COVERGLASS 1	1
8	RH3062	STEERING MECH SPACER	4
9	6680	6 X 1/2" PHILLIPS WOOD SCREW	12
10	RH3023	PODIUM TOP UPPER/LOWER SPACER	4
11	RH3022	PODIUM TOP SPACER MIDDLE	2
12	RH3161	PODIUM TOP TIER 3	1
13	6281	1/4-20 x 1 1/2 BSHCS (BLACK)	4
14	6430	#10 FLAT WASHER, BLACK (1/4-20)	13
15	6584	1/4-20 X 2.00 SBHCS (BLACK)	8
16	WC2005	BUTTON (YELLOW OVAL)	1
17	STEERING WHEEL ASSY		1
18	PC60604	NYLOCK NUT, 1/4-20	5
19	6227	1/4-20 x 2 1/2 BSHCS	4
20	655	#8 x 3/4 SQ. DRIVE (BLACK)	6
21	6268	M6 X 12 HHMB	3
22	6053	1/4" LOCK WASHER	3

ASSEMBLY DRAWINGS - RH3060X

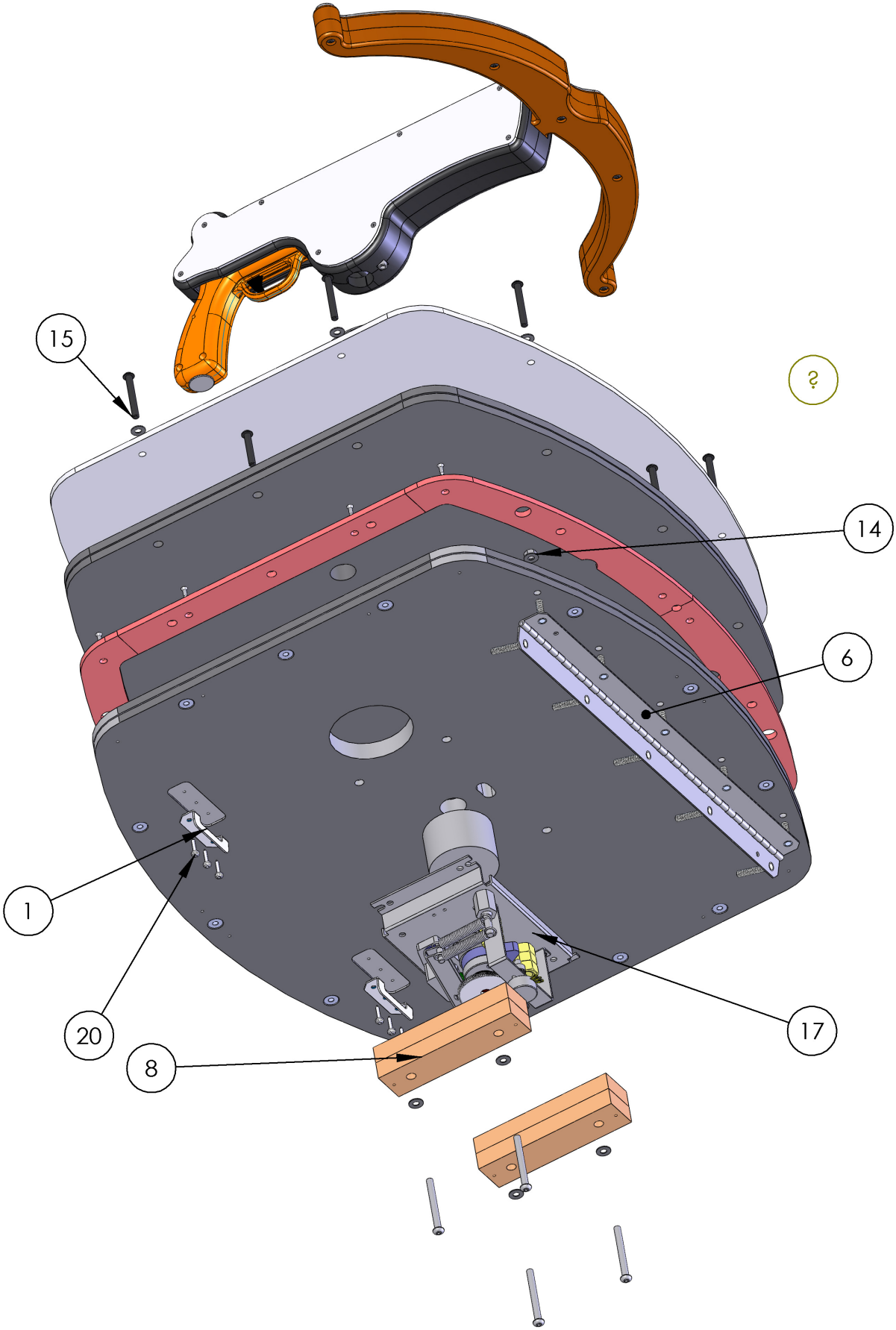

ASSEMBLY DRAWINGS - RH3167X

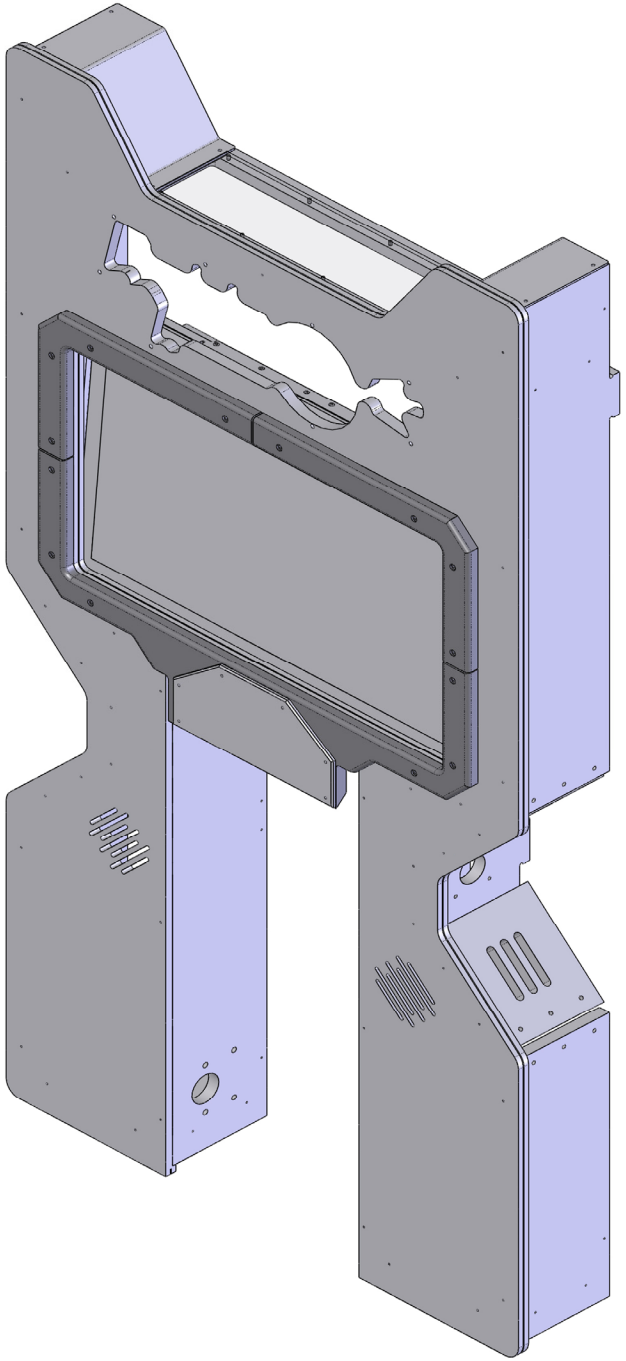

ITEM NO.	PART NUMBER	DESCRIPTION	QTY.
1	RH3167	MONITOR CAB FRONT	1
2	RH3164	MONITOR FRAME LEFT	1
3	RH3166	MONITOR FRAME TOP	1
4	RH3165	MONITOR FRAME RIGHT	1
5	RH3162CX	MONITOR CAB BACK ASSY	1
6	6493	8-32 X 25/64 THREADED INSERT	16
7	RH3101	UPPER CABINET SIDE	1
8	RH3102	CAB SIDE UPPER VENTED ANGLE	4
9	RH3103	CABINET SIDE LIGHT BASE	2
10	RH3104	LOWER CABINET SIDE	1
11	RH3109	CABINET TOP	1
12	RH3105	LOWER CABINET INNER WALL	1
13	RH3111	CABINET LEG BOTTOM	2
14	RH3120	UPPER CABINET SIDE	1
15	RH3121	XXXX	1
16	RH3112X		10
17	RH3116	MONITOR TRIM UPPER	1
18	RH3124	MONITOR TRIM UPPER RIGHT	1
19	RH3162	MONITOR FRAME BOTTOM	1
20	RH3122	LOWER CABINET INNER WALL	1
21	RH3117	MONITOR TRIM LOWER	1
22	RH3110	CABINET TOP COVER PLATE	2
23	RH7010	FRONT PLATE	1
24	32in LCD		1
25	RH3125	CABINET TOP WINDOW	1

ASSEMBLY DRAWINGS - RH3167X

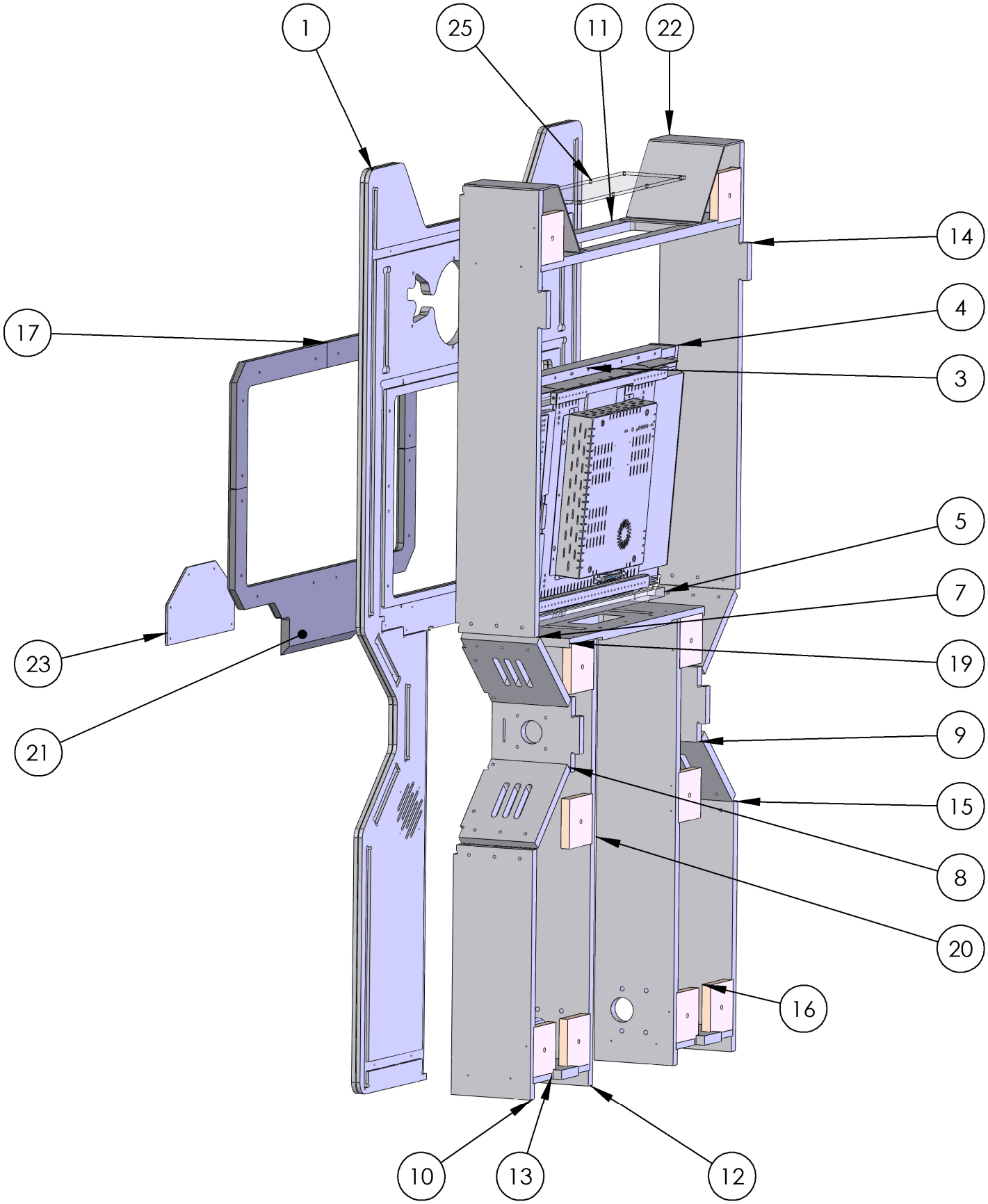

ASSEMBLY DRAWINGS - RH3167X

ITEM NO.	PART NUMBER	DESCRIPTION	QTY.
1	RH3127	MONITOR GLASS	1
2	MON32LCD	TFT MONITOR	1
3	RH3167CX		1
4	RH3118X		1
5	FP2007	SPEAKER (4" ROUND) KS40064-RO	2
6	PW2130X	ASY (2D BULB SOCKET)	1
7	RH3106	SIDE ACRYLIC	2
8	RH3107	SIDE SPACER	4
9	RH3108	COVER PLATE	4
10	RH3168	MONITOR CAB BACK UPPER	1
11	RH3115	CABINET UPPER REAR DOOR	1
12	RH3113	CAB REAR DOOR LOWER LEFT LEG	1
13	RH3114	CABINET REAR DOOR LOWER RIGHT LEG	1
14	E00382	BULB CF 27W (PHILIPS #EL/MDT27W	1
15	RH3014X	BONUS MARQUEE	1
16	RH7026	MC MARQUEE	1
17	RH3175	MC MARQUEE SPACER	1
18	MS2364X	FAN ASSEMBLY	1
19	RH3112X		3
20	6753	#8-32 x 1" LG PPHMS	8
21	6752	#8-32 x 1" LG PPHMS	34

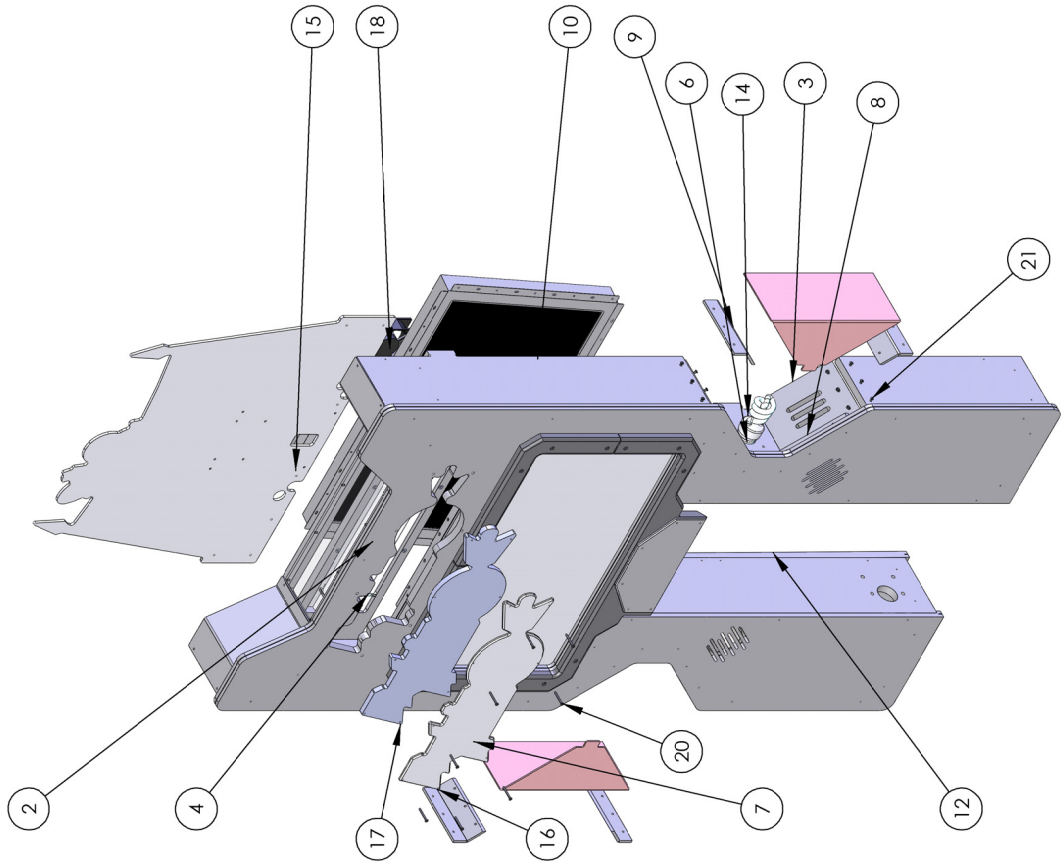

ASSEMBLY DRAWINGS - RH1018X

ITEM NO.	PART NUMBER	DESCRIPTION	QTY.
1	CL1120	LEVELING LEG SHORT	1
2	Leveler plate		1
3	hex nut_ai		1
4	RH1018	LEG SUPT	1
5	PEM S-832-2 ZI--N	8-32 PEM NUT (CS)	4
6	RH3019	LEG BOTTOM PANEL	1
7	RH3029	LEG LEFT PANEL	1
8	RH3016	LEG BACK PANEL	1
9	RH3015	LEG LIGHT FILTER	2
10	RH3087	LEG RIGHT PANEL	1
11	PC60631	025-20 CABINET INSERT (J50115)	4
12	6493	8-32 X 25/64 THREADED INSERT	8
13	655	#8 x 3/4 SQ. DRIVE (BLACK)	21
14	6238	BHCS, #8-32 x 1" LG. (BLACK OXIDE)	12

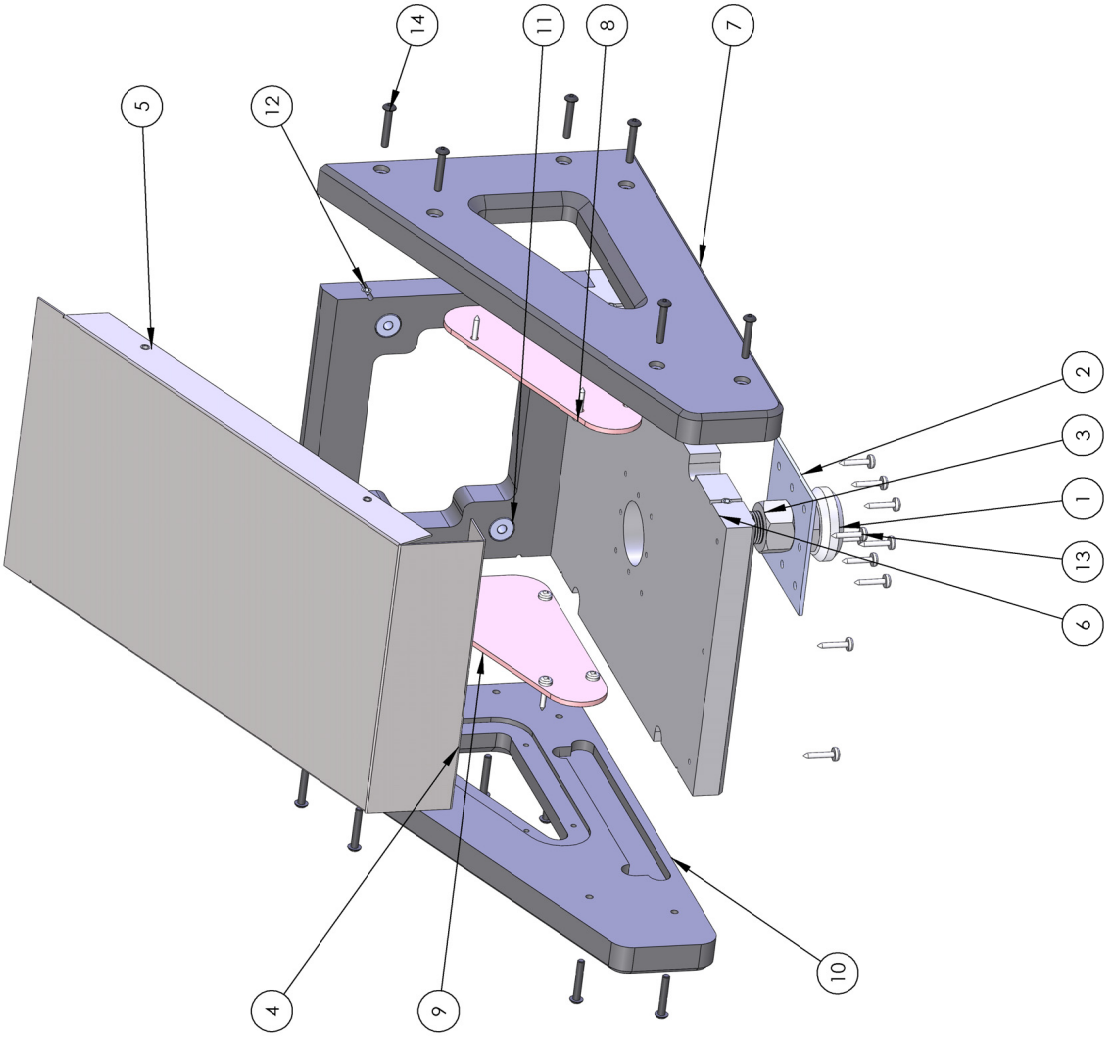

ASSEMBLY DRAWINGS - RH3006X

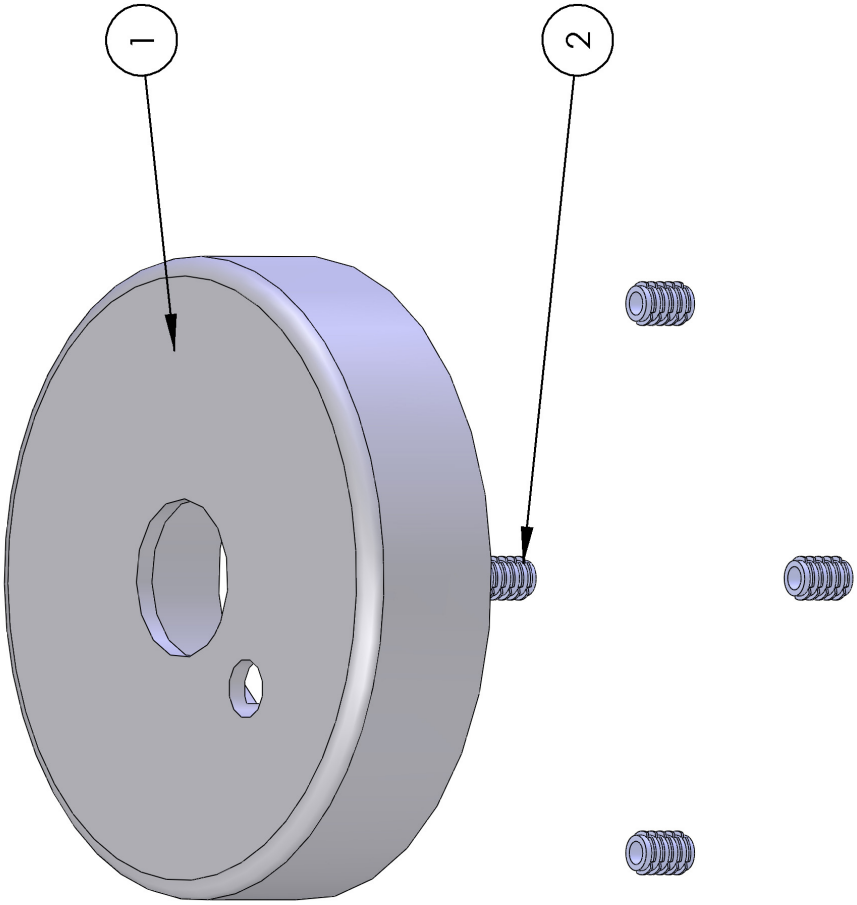

ITEM NO.	PART NUMBER	DESCRIPTION	QTY.
1	RH3006	CROSSBOW SUPP TUBE TOP DISK	1
2	6493	8-32 X 25/64 THREADED INSERT	4

ASSEMBLY DRAWINGS - RH3006X

ITEM NO.	PART NUMBER	DESCRIPTION	QTY.
1	RH3005	CROSSBOW SUPP TUBE MID DISK	1
2	RH3006CX		1
3	RH3007	CROSSBOW SUPP TUBE LOWER DISK	1
4	6751	8-32 x 2.25 PFHMS	4

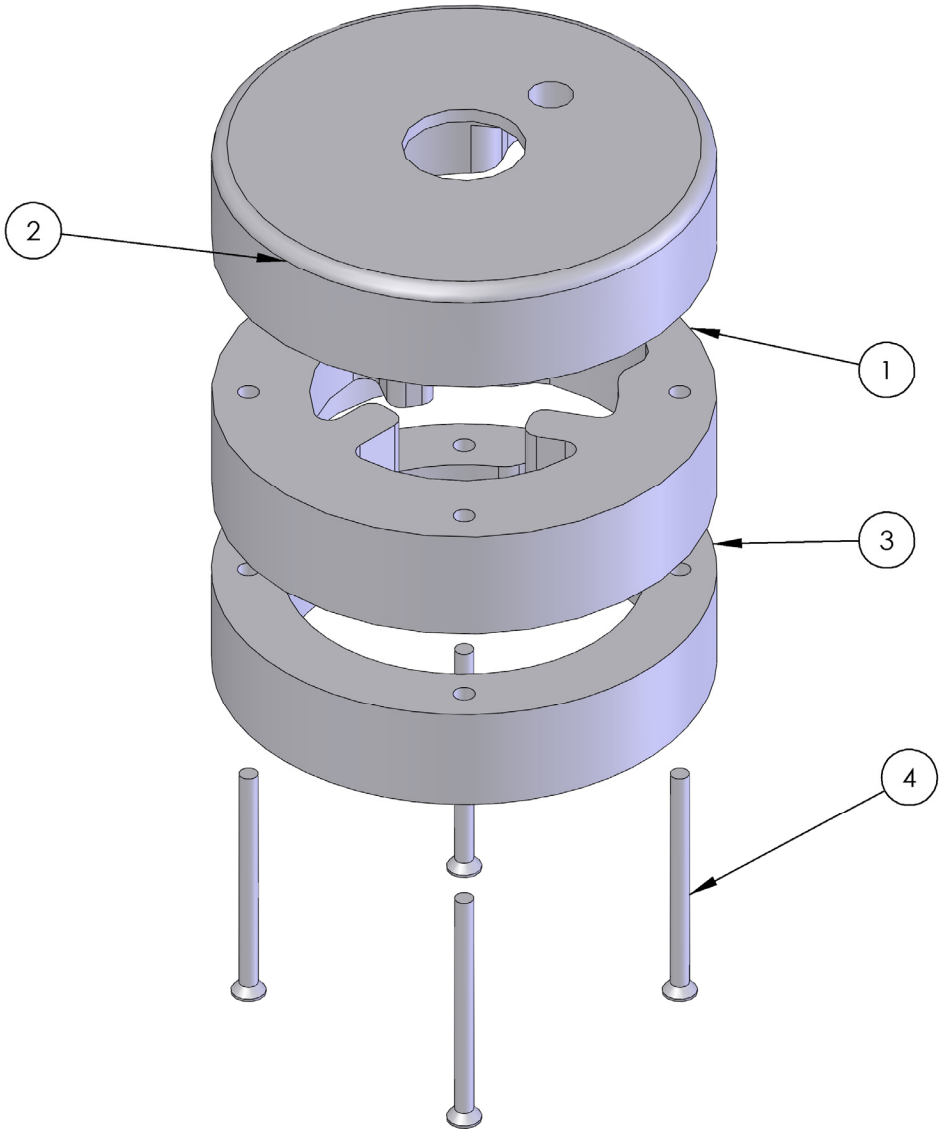

ASSEMBLY DRAWINGS - RH3010X

ITEM NO.	PART NUMBER	DESCRIPTION	QTY.
1	RH3010	CROSSBOW LEFT SIDE	1
2	RH3011	CROSSBOW RIGHT SIDE	1
3	RH3017X	CROSSBOW BOW FINAL ASSY	1
4	RH7029	CROSSBOW LEFT GRAPHIC	1
5	RH7030	CROSSBOW RIGHT GRAPHIC	1
6	96-0500-00		1
7	6600	10-24 x 17/32" LG. JOINT CONNECTOR NUT (STAFAST)	7
8	6634	#4 X 3/4 PFH WOOD SCREW BLACK	16
9	6110	JOINT CONNECTOR 1/4-20 X0.75 THREAD	1
10	6130	CARRIAGE BOLT 10-24x0.75x0.75-N	7
11	6075	1/4 x 3/4 FLAT WASHER ZINC (USS)	4
12	6425	5/16-18 x 1-1/4 BSHCS W/LOCTITE	2
13	6228 5-16-18 JAM NUT		2
14	RH3176	PUSH-IN PLUG	1

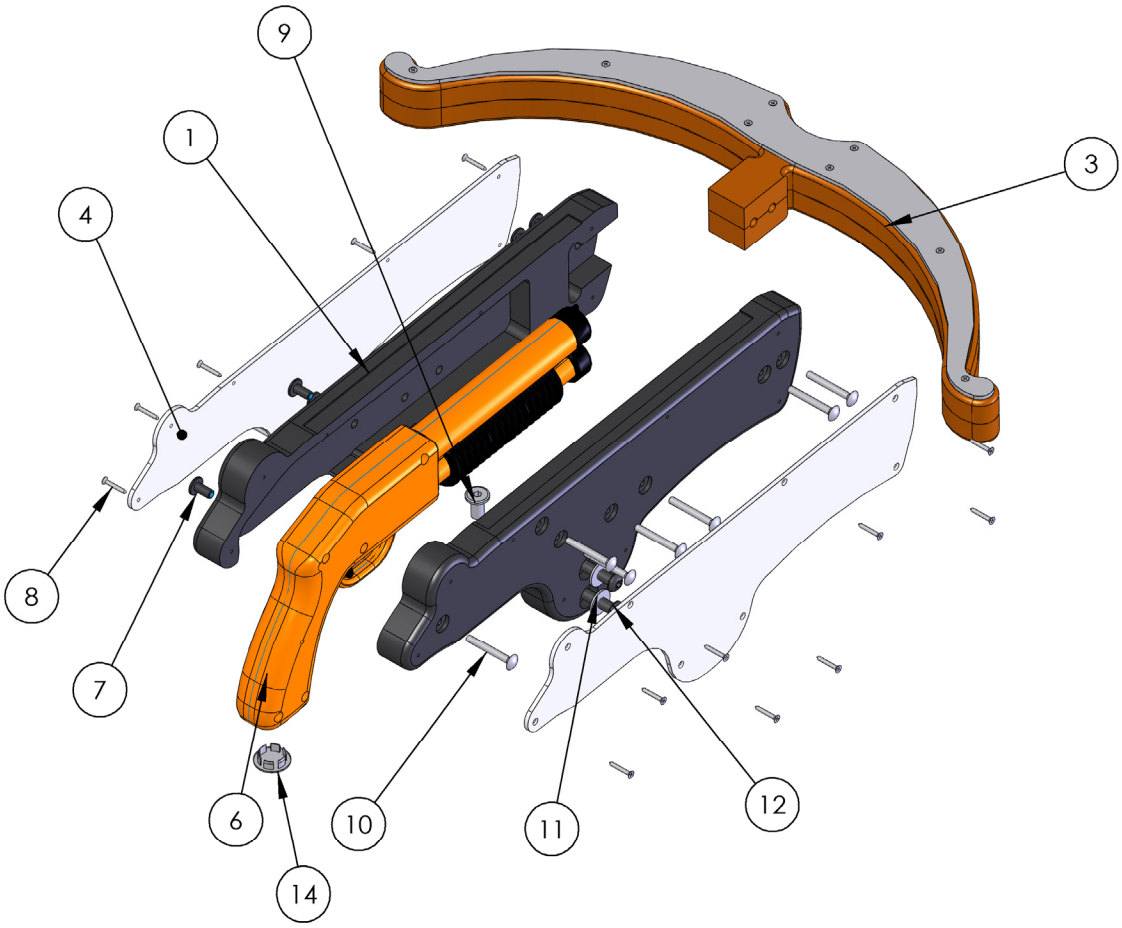

ASSEMBLY DRAWINGS - RH3014X

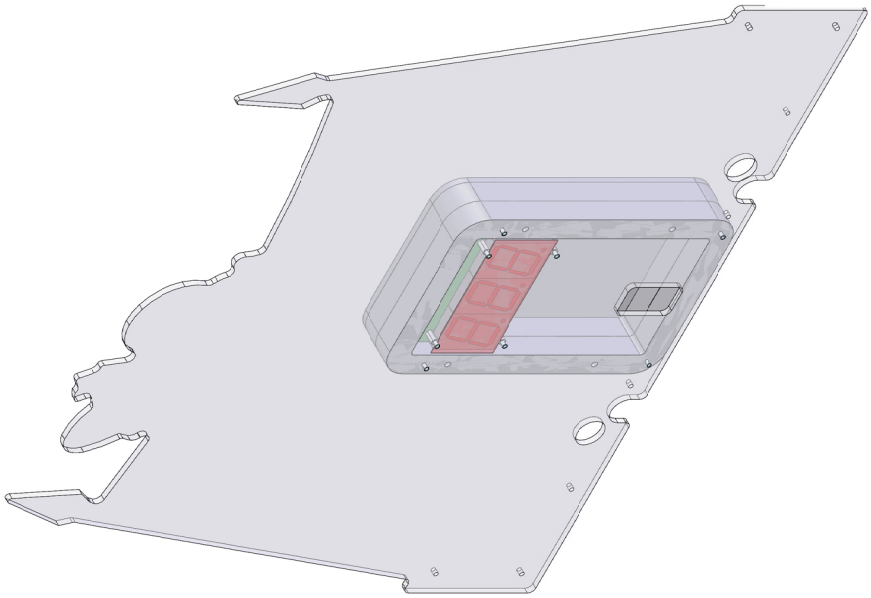

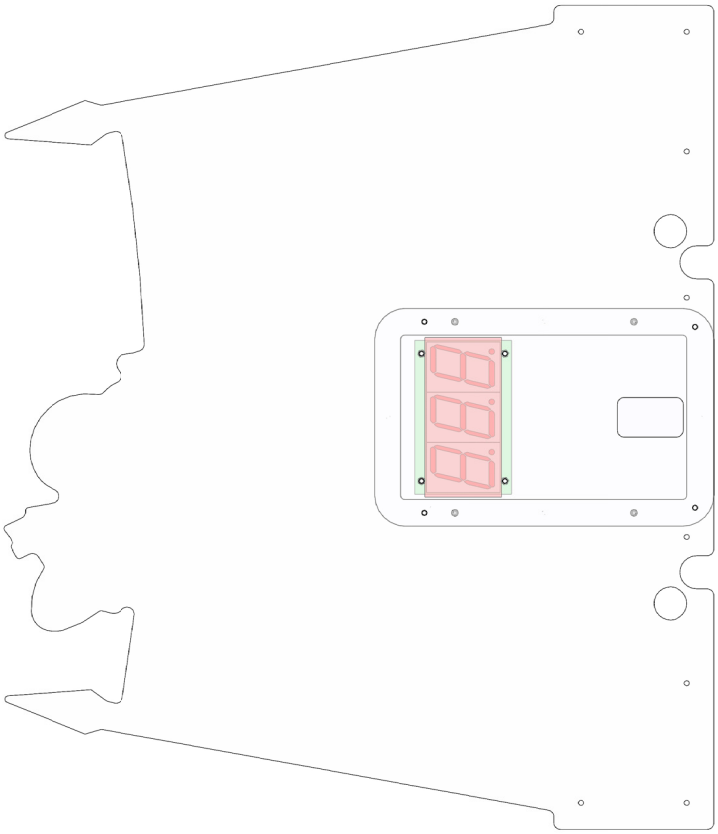

ITEM #	QTY.	PART #	DESCRIPTION
1	1	ML2032X	PCBA (DISPLAY, RED LED DIGITS)
2	1	RH3003	BONUS MARQUEE DISPLAY FILTER
4	1	RH3053	BONUS MARQUEE SPACER
5	1	RH3097	BONUS MARQUEE COVER
7	1	RH3061	BONUS MARQUEE BACK
8	4	6061	8-32 CAB INSERT (J-50111)
9	4	6166	#6 DRYWALL SCREW 1-1/2"
10	4	6240	#8 USS WASHER (BLACK)
11	4	6272	BHCS #8-32 x 1.25" LG. (BLACK OXIDE)
12	1	RH3176	RH BONUS MARQUEE

ASSEMBLY DRAWINGS - RH3014X

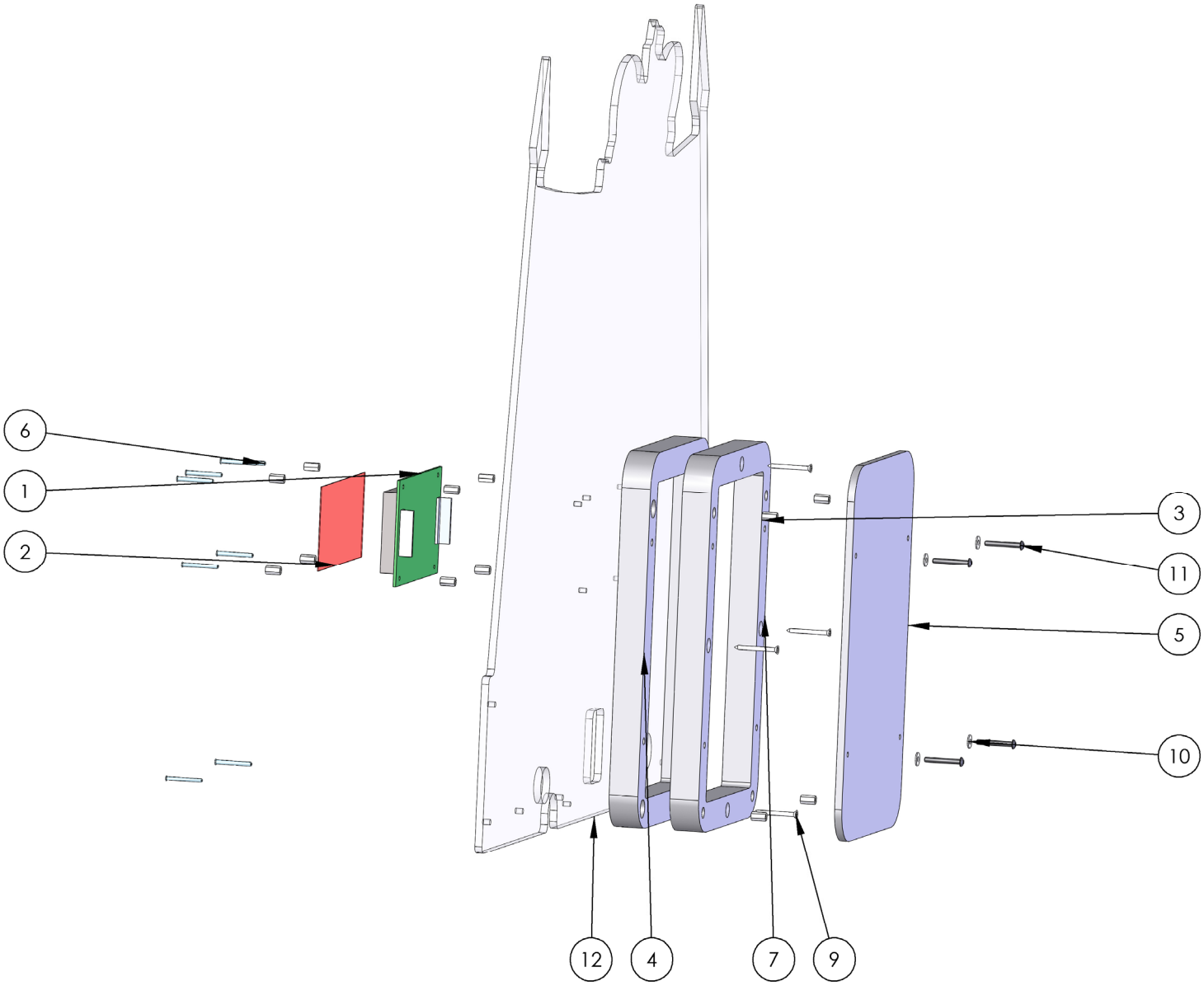

ASSEMBLY DRAWINGS - RH3017X

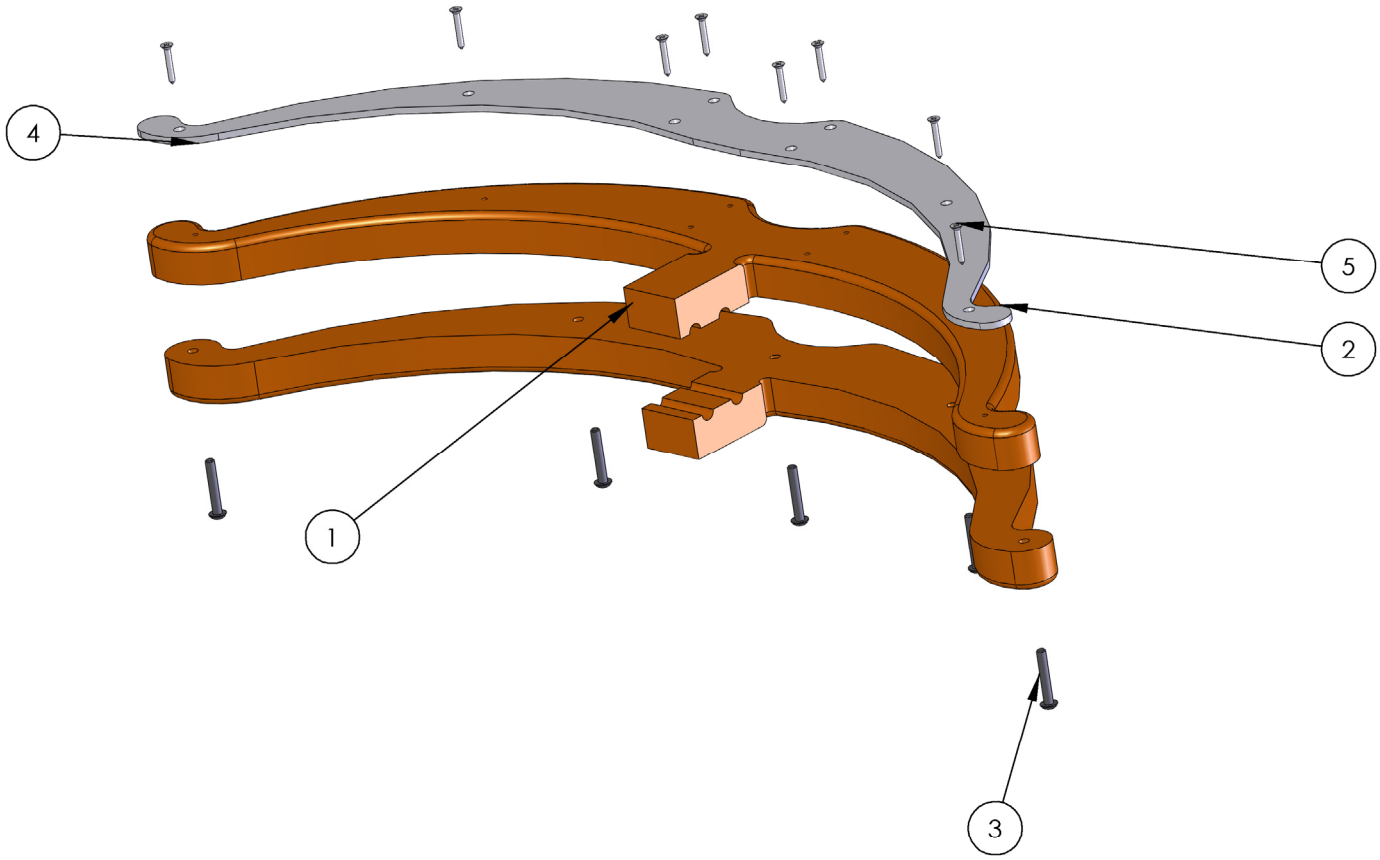

ITEM NO.	PART NUMBER	DESCRIPTION	QTY.
1	RH3017	CROSSBOW BOW HALF LOWER	1
2	RH3024CX	CROSSBOW TOP BOW ASSY	1
3	6238	BHCS, #8-32 x 1" LG. (BLACK OXIDE)	5
4	RH7025	CROSSBOW LIMBS GRAPHIC	1
5	6634	#4 X 3/4 PFH WOOD SCREW BLACK	8

ASSEMBLY DRAWINGS - RH3024X

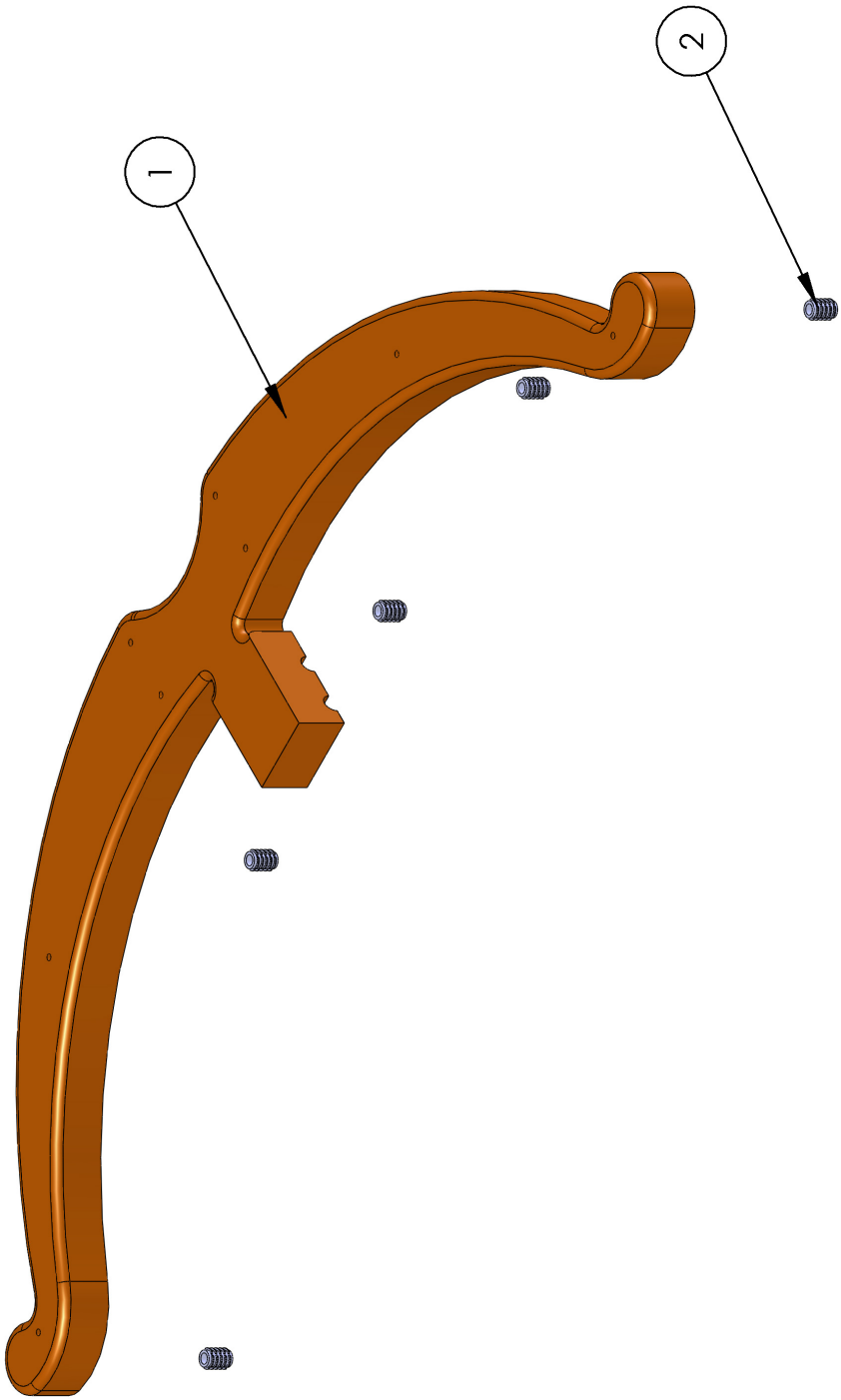

ITEM NO.	PART NUMBER	DESCRIPTION	QTY.
1	RH3024	CROSSBOW BOW HALF UPPER	1
2	6493	8-32 X 25/64 THREADED INSERT	5

ASSEMBLY DRAWINGS - RH3080X

ITEM NO.	PART NUMBER	DESCRIPTION	QTY.
1	RH3052CX	PODIUM BACK ASSY	1
2	RH3055CX	PODIUM FRONT ASSY	1
3	RH3050	PODIUM LS	1
4	RH3051	PODIUM LS	1
5	RH3054	PODIUM BOTTOM	1
6	RH3056	PODIUM KICKPLATE LOWER	1
7	RH3057	PODIUM KICKPLATE UPPER	1
8	RH3098	PODIUM HINGE SPACER	1
9	6030	DRYWALL SCREW 1.25	2
10	WA1051	LATCH V4-0006-02	2

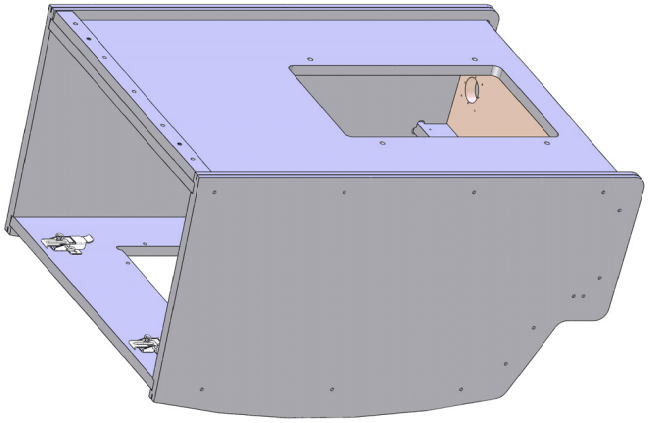

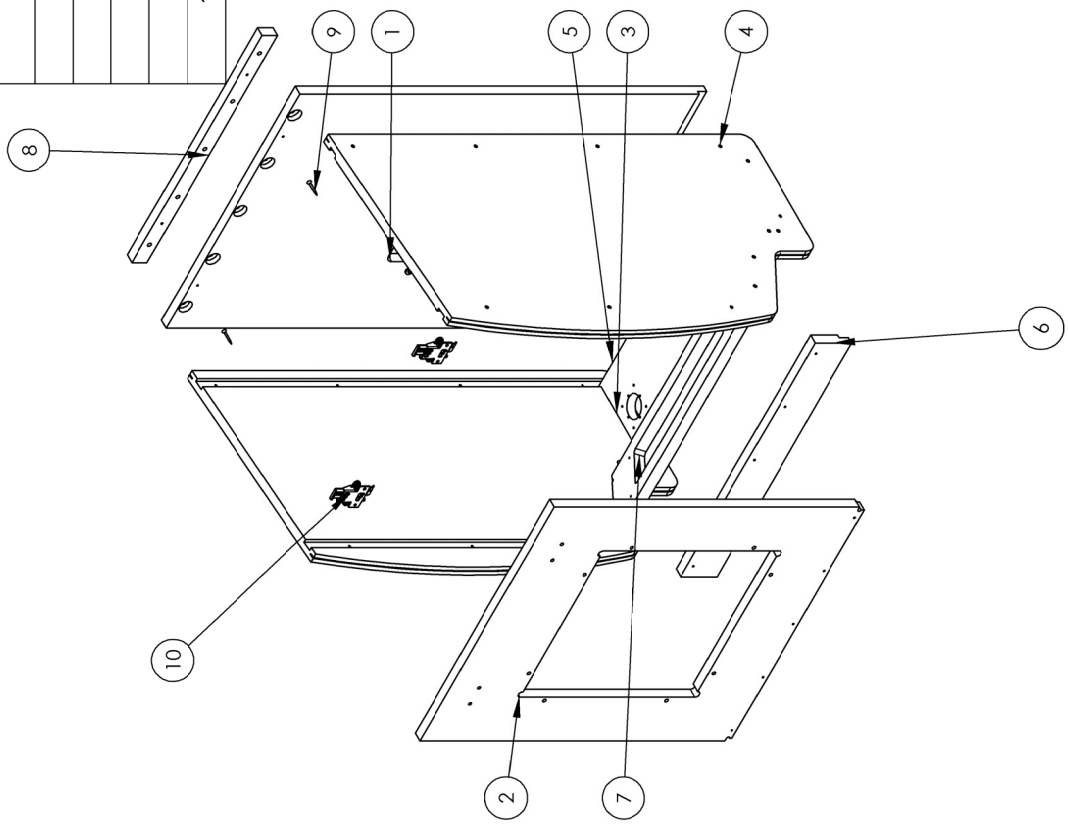

Spare Parts

Electronics

RH2090X	Restore Disk
RH2000	Computer
RH2014	Dongle
UC2010	Power supply
EV2009	Audio Power amp
HH5005CL	Ticket dispenser
RH3017X	Crossbow assembly
RH4001X	Steering mechanism
E00260RHX	Potentiometer assembly
RH2081LX	Trigger harness
2007	4” round speaker
8312	PL-L 40W/41/RS/IS FLU bulb
BW2017	Bulb plastic clip
BW2018	Bulb plastic support
E00253	CF13w 4100k cool white bulb
MON32LCDE	32” LCD monitor
BA2063LX	AC harness for monitor
AH2012	Power supply
EC2009	Audio power amp
MB2034WCX	Main I/O board
PH2007X	Power mod 6 amp
MS2364X	Fan assembly
MZ8284X	Ballast assembly
PP250X	Socket assembly
RH2063LX	Ballast/Fan harness
RH2065LX	AC light harness
RH2082LX	Speaker harness
RH2083LX	Bonus Extension harness
RH2084LX	Bonus display harness
RH7027X	Marquee assembly
RH2050HX	Main harness
RH2061LX	Main AC power harness
RH2062MX	AC lights extension harness
RH2064LX	Computer AC cord
RH2085LX	Audio Amp harness
RH2051HX	Coin door harness
1029WSX	Reset assembly button
8976RHX	Red meteor light assembly
WA1007X	Reset button w/bracket assembly
WC2005	Yellow oval button

Mechanical

SH2130X	Ceramic socket assembly
201	T-molding Chrome
RH2010C	Trigger
RH2010D	Trigger spring
RH2010E	Trigger switch
WA5001A8X	Triple coin door

Decals

RH7000	Ticket door decal
RH7001	Cabinet top decal
RH7002	Start button decal
RH7003	Cabinet left decal
RH7004	Cabinet right decal
RH7005	Left podium decal
RH7006	Front podium decal
RH7007	Right podium decal
RH7008	Ramp decal
RH7009	Podium Logo decal
RH7010	Suitable for all ages decal
RH7011	Program button decal
RH7012	Control panel decal
RH7013	Side banner decal
RH7025	Crossbow LMBS
RH7026	Marquee lower decal
RH7029	Left crossbow decal
RH7030	Right crossbow decal
RH7032	Top crossbow decal

WARRANTY POLICY

I.C.E. Inc warrants all components in new machines to be free of defects in materials and workmanship for the period listed below:

- 180 days on Main PCB's, Computers & Motors
- 1 year on all LCD monitor panels
- 90 days on all other electronic and mechanical components
- 30 days on all I.C.E. repairs and parts purchases

I.C.E. Inc shall not be obligated to furnish a warranty request under the following conditions:

- Equipment or parts have failed through normal wear and tear
- Equipment has been subjected to unwarranted stress, abuse or neglect
- Equipment has been damaged as a result of arbitrary repair/modification

Products will only be covered under warranty by obtaining an I.C.E. authorized RMA #. To obtain an RMA # please provide I.C.E. tech support with the game serial # or original I.C.E. invoice # and a detailed description of the failure or fault symptoms.

I.C.E. Inc will assume no liability whatsoever for costs associated with labor or travel time to replace defective parts. All defective warranty covered components will be replaced with new or factory refurbished components equal to OEM specifications.

I.C.E. Inc will cover domestic UPS ground, or comparable shipping costs during the warranty period. International or expedited shipments are available for an additional charge. To obtain credit defective parts must be returned to I.C.E. Inc, at the customer's expense, within 30 days. After 30 days a 15% re-stocking fee will apply to all returns.

ICE distributors are independent, privately owned and operated. In their judgment, they may sell parts and/or accessories other than those manufactured by I.C.E. Inc. We cannot be responsible for the quality, suitability or safety of any non-I.C.E. part or modification (including labor) that is performed by such a distributor.

Innovative Concepts in Entertainment
10123 Main St.
Clarence, NY 14031
Phone #: (716) - 759 – 0360
Fax #: (716) – 759 – 0884
www.icegame.com